Installation Instructions

GLASS DOOR 0mm HINGE & PLATE

Technical Specifications

Table 1: Technical Specifications

Item	Value
Hole diameter	26 mm (+0.2 / −0)
Cup hole spacing	22 mm
K value	3–5 mm

Installation Steps

Step 1 — Marking the Cabinet

Check that the front edge of the side panel is plumb, then mark the 37 mm hole positions for the base plate. The upper and lower hinges must be aligned on the same vertical line.

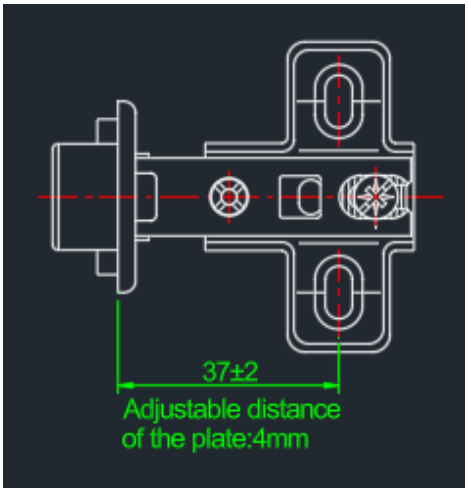

Figure 1: Base plate dimension drawing (37 ± 2 mm; adjustable distance of the plate: 4 mm)

Step 2 — Installing the Base Plate

Secure the cross-shaped base plate with 3.5–4 mm wood screws.

Step 3 — Installing the Cup Head and Cap

Press the plastic cup head into the glass hole (interference fit) and tap it gently until fully seated. Make sure it is perpendicular to the glass surface and not tilted.

Place the cap against the glass surface → hand-tighten the screws two turns to locate → tighten crosswise evenly.

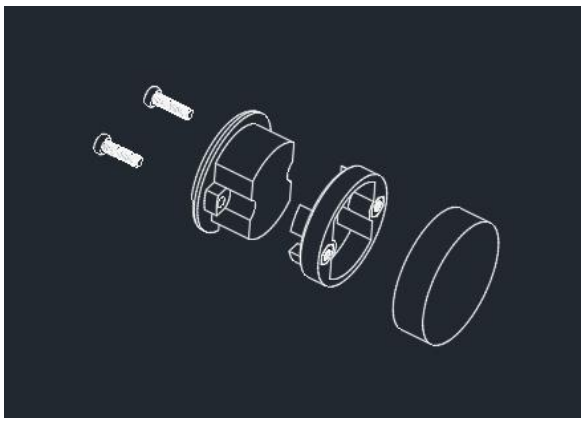

Figure 2: Exploded view of the cup head and cap assembly

Step 4 — Hanging the Door + Three-Dimensional Adjustment

After sliding the hinge body into the base plate, adjust the screws. Adjustment order: depth → horizontal → height.

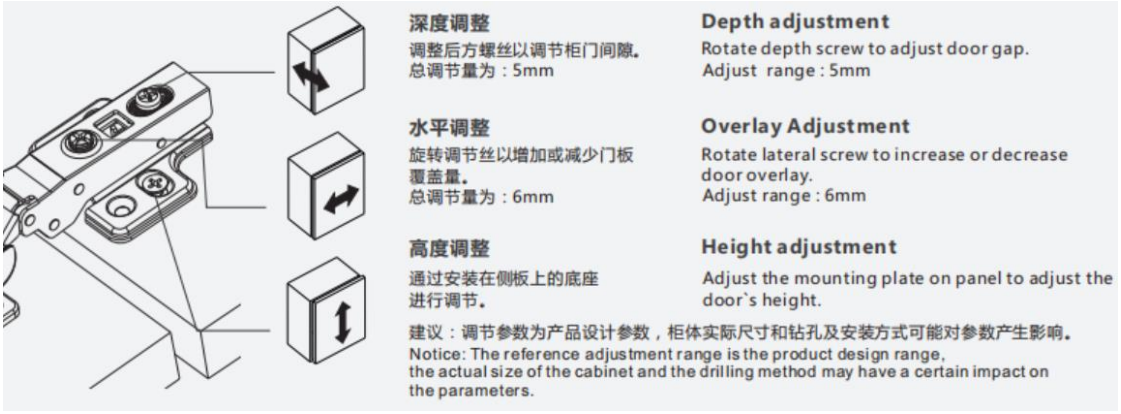

Figure 3: Three-dimensional adjustment — depth, horizontal (overlay) and height